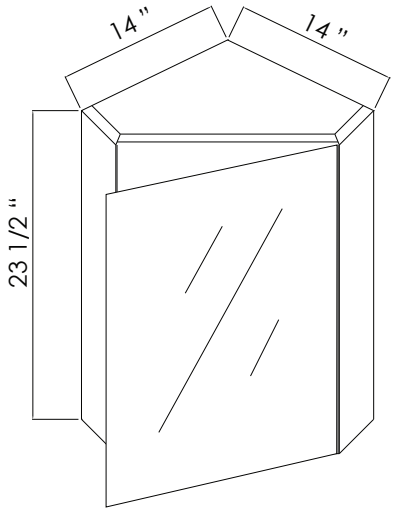
14"
14"
23 1/2"

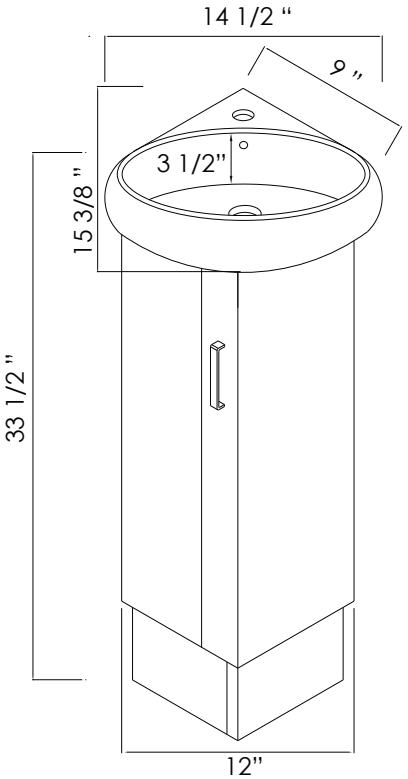
14 1/2"
9"
3 1/2"
15 3/8"
33 1/2"
12"

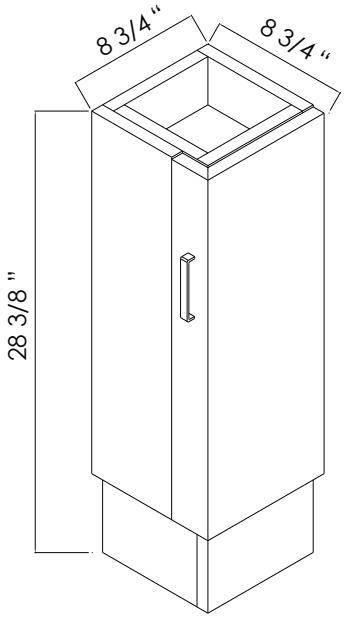
8 3/4"
8 3/4"
28 3/8"

BACK VIEW

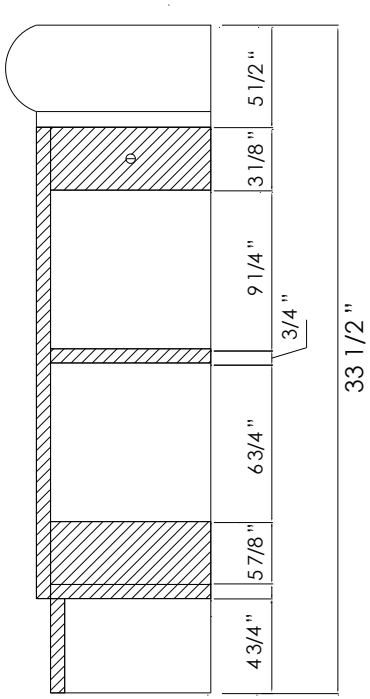
5 1/2"
3 1/8"
9 1/4"
3/4"
6 3/4"
5 7/8"
4 3/4"
33 1/2"